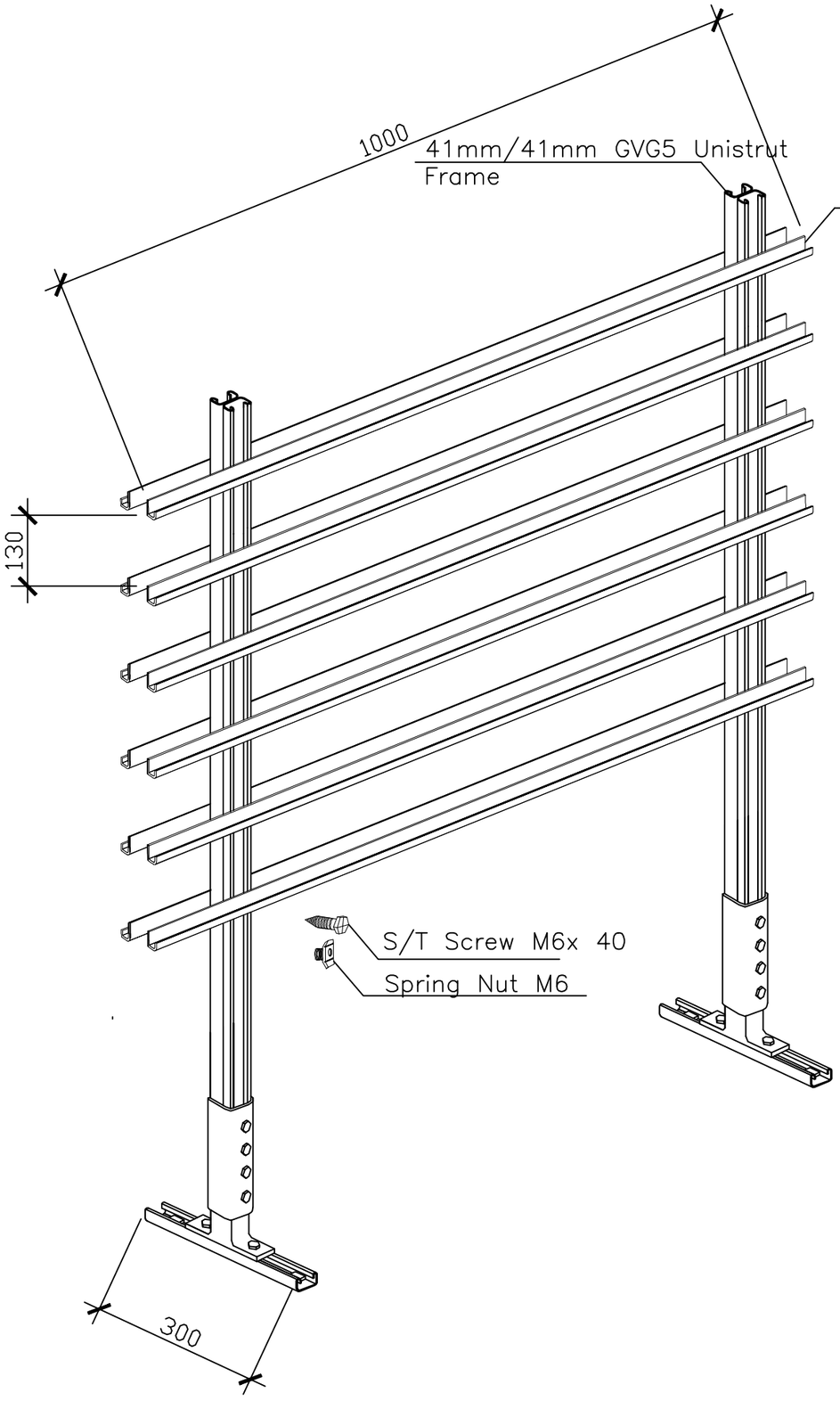


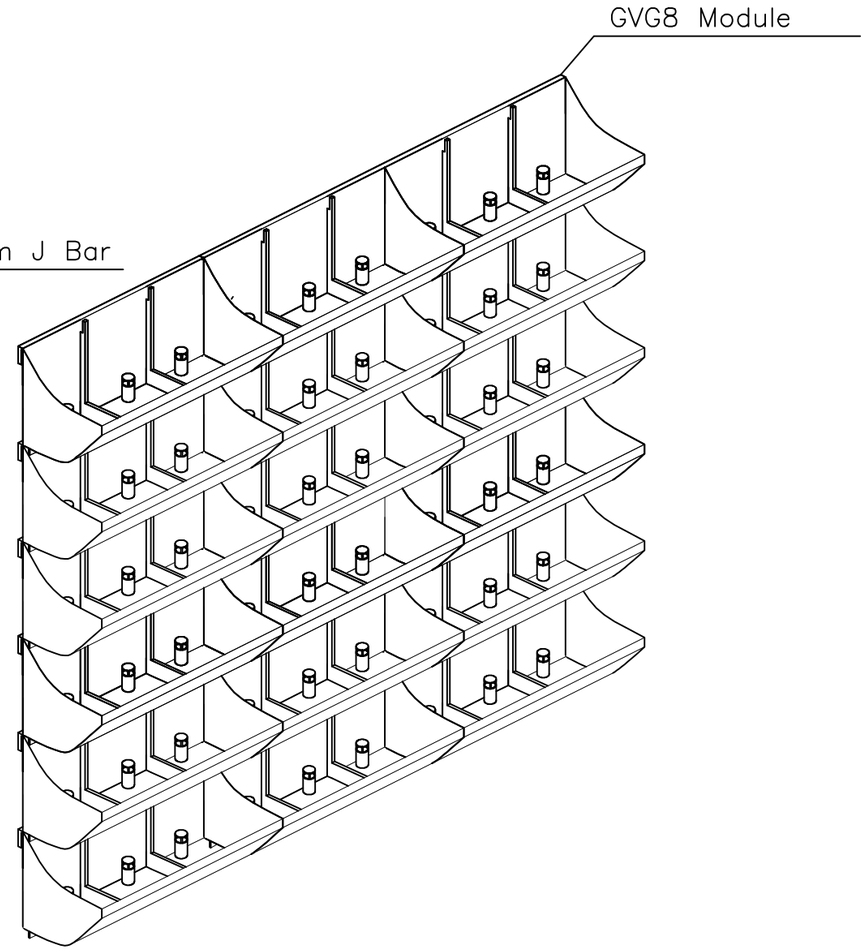


# Greenology GVG8 Double Sided Schematic Isometric View

sc 1:10

ALL DESIGN, PRINTS & SPECIFICATIONS ARE THE PROPERTY OF GREENOLOGY PTE LTD AND CANNOT BE USED WITHOUT THEIR WRITTEN PERMISSION. CONTRACTORS MUST CHECK ALL DIMENSIONS ON SITE. ANY DISCREPANCIES MUST BE REPORTED IMMEDIATELY BEFORE PROCEEDING.

| AMENDMENTS | DATE & SIGNATURE |
|---|---|
| | |
| | |
| | |
| | |
| | |
| | |
| | |
| | |
| | |

Project Title:
GVG 8

Job Number:
Greenology/ GVG 8

| Drawing Number: | Revision Number: |
|---|---|
| #00 | #00 |

Subject of Drawing:
GVG8 Double Sided Schematic

Date of Drawing:
15 August 2011

Scale of Drawing:
1:10

Drawn By:
Greenology Pte Ltd
289/290 Farnborough Road
Singapore 509747
Tel. +65 6214 1140
Fax. +65 6214 0191

N